DRAWING STATUS	
Issue No:	1
Date:	20/02/2025
Issued by:	VH

Standard	
Proposal	
For Approval	
As Manufactured	

Not to scale

This drawing is Copyright and may not be used for any purpose other than that for which it was supplied without written consent

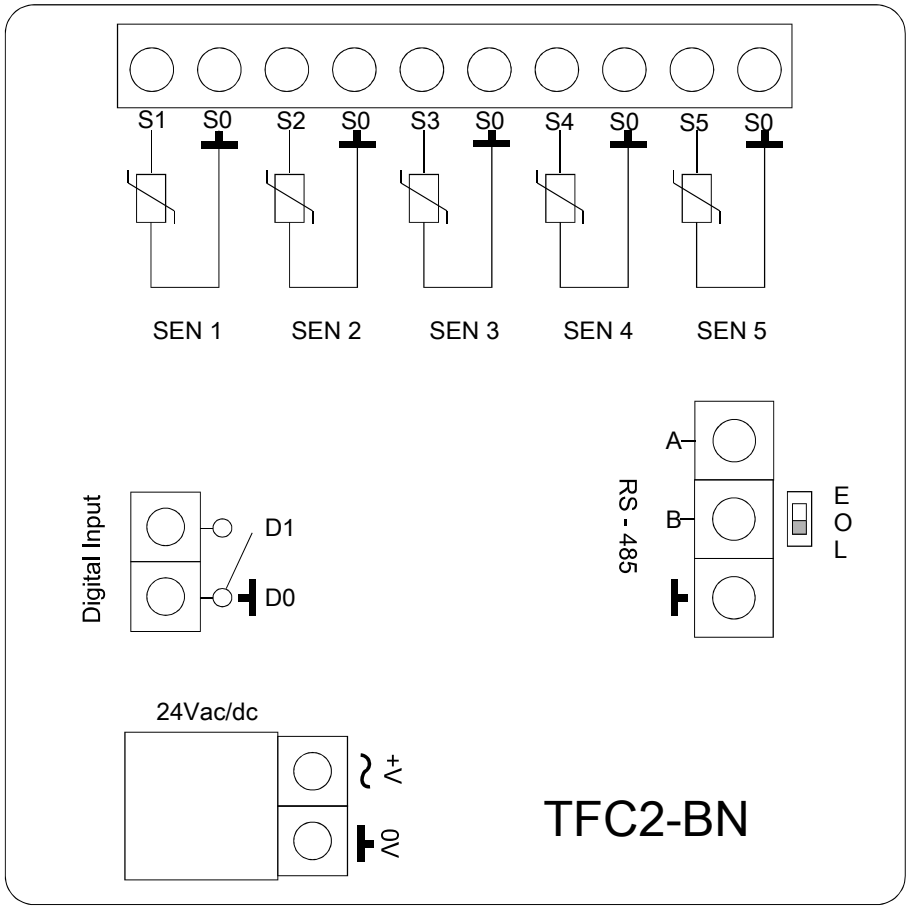

TFC2BN

BACnet MS/TP Communication
USB port for firmware upgrades
24Vac/dc power supply
Requires 47mm deep single gang flush back box
Built in sensor concealed under rotary knob
5 additional 10K3A1 thermistor inputs
Plug-in terminal blocks
Optional humidity sensor
End of line resistor DIP switch

Ref.	TFC2BN	Customer	
Date		Project	TFC2BN Wiring